Through Ceiling Mount Kit for S4935, S5379, S6360

Through Ceiling Installation

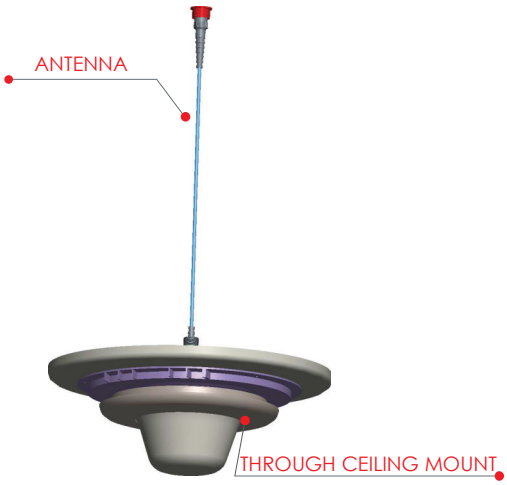

DESCRIPTION:

Through ceiling mounting conceals the antenna with only the nose protruding through the ceiling. The base plate is hidden above the false ceiling which results in a 40% reduction of the visibile antenna footprint . This through ceiling mount is suitable for tile thickness range from 0.55" to 0.82" (14mm to 22mm)

Specifications	
Environmental Conditions	Indoor
Weight	0.5lbs (230g)
Diameter	13.4" (340mm)
Height	2.9" (73mm)
Hard Ceiling Mount Color	White
Hard Ceiling Mount Material	PC/ABS
Clearance above ceiling	(4.00"/101.6mm)
RoHS	Compliant
Approved for Installation in Plenum Space / Listed & Tested by Intertek / ETL	

INSTALLATION STEPS:

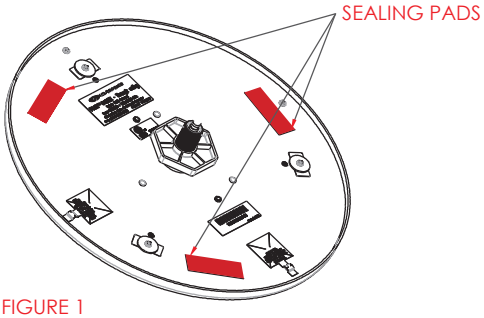

FIGURE 1

1 Remove the three 'through ceiling hole' sealing pads from the bottom plate as outlined in figure 1.

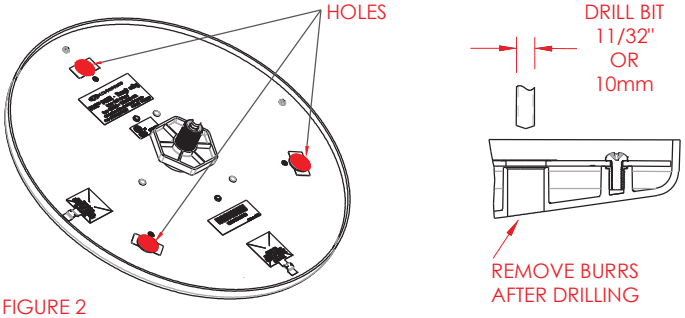

FIGURE 2

2 Using the open 'Through Ceiling Holes' of the bottom plate, drill three holes into the radome with a 11/32" or 10mm drill bit. Remove any burrs after drilling.

21-906-03 Release Date: August 12, 2020; Revision C

Copyright © 2016 – Galtronics Corporation Ltd.
Proprietary Information. All rights reserved. Galtronics reserves the right to modify or amend any antenna or specification without prior notice.

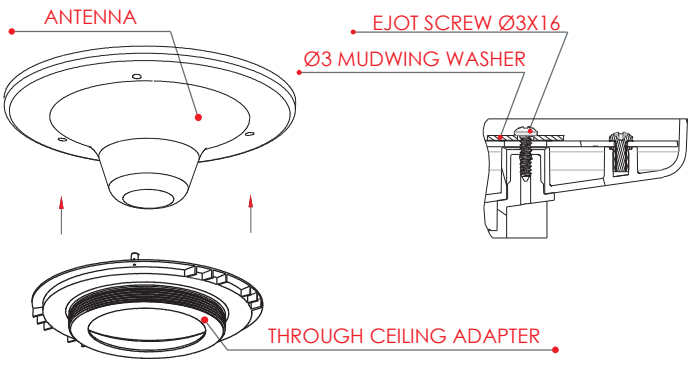

FIGURE 3

3 Attach the 'Through Ceiling Adapter' to the antenna and fasten it as outlined in figure 3 using the three self-taper screws and washer provided with the mounting kit. Tightening torque 8.8Lb*In (1Nm)

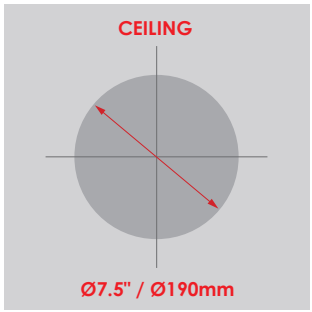

FIGURE 4

4 Cut a hole of Ø7.5" / 190mm diameter into the ceiling where the antenna shall be installed.

PEAR ANTENNA WITH THROUGH CEILING ADAPTER

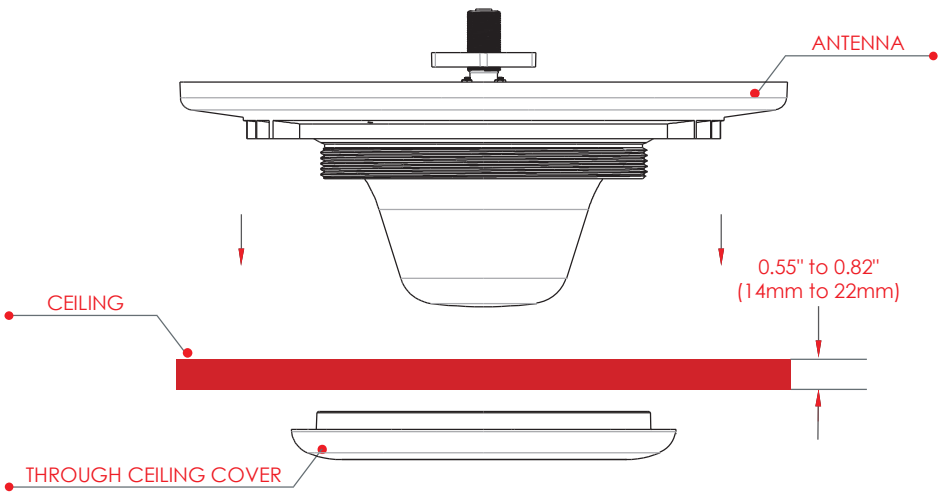

5 Place the antenna with attached 'Through Ceiling Adapter' through the hole in the ceiling and fasten the antenna to the ceiling with the 'Through Ceiling Cover' provided.

21-906-03 Released Date: December 2th, 2016; Revision B

Copyright © 2016 – Galtronics Corporation Ltd.
Proprietary Information. All rights reserved. Galtronics reserves the right to modify or amend any antenna or specification without prior notice.